TRANSMISSION MOUNTING (MECHANICAL TRANSMISSION)

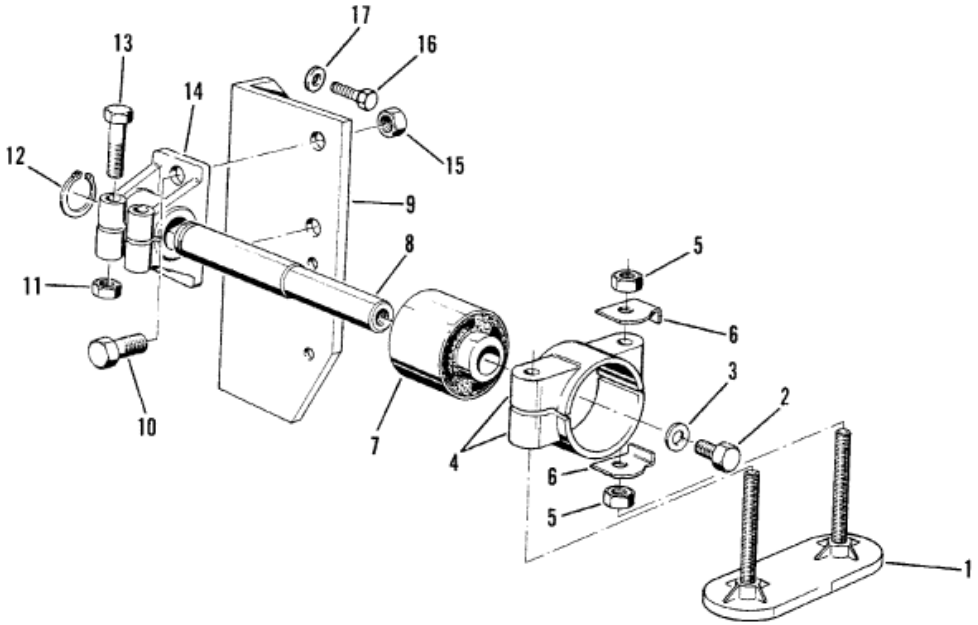

Parts List

Ref	Class	Part	Description	Qty	Comment	Footnote
1		801765040	BASE	2		
2	10	809913815	SCREW	2		
3	12	809936436	WASHER	2		
4		801765035	HOUSING	2		
5	11	809923100	NUT	8		
6	14	801765045	WASHER-Tab	8		
7	23	801763874	BUSHING	2		
8	17	801763900	PIN	2		
9		801765042	BRACKET	2		
10	10	809913837	SCREW	4		
11	11	809922426	NUT	4		
12	53	809934175	SNAP RING	2		
13	10	809912524	SCREW	4		
14		801761389	BRACKET	2		
15	11	809922430	NUT	4		
16	10	809913889	SCREW	4		
17	12	809931084	WASHER	4		